Reversion	Engineering Change Description	Date	Owner
A/0	NEW	2019.10.30	ZXM

Electrical performance

Characteristic impedance	50Ω
Frequency range	DC to 8 GHz
Standing wave ratio(VSWR)	≤1.15(DC～8GHz)
withstand voltage	≤0.1 x √f(GHz) dB
working voltage	2500 V rms
Test voltage	1400 V rms
Insulation resistance	≥5000MΩ
Center pin contact resistance	≤1.5mΩ
Conductor contact resistance	≤1.5mΩ
Intermodulation 3rd order	-160dBc@2x43dBm

Mechanical and environment

Tempreture range	-40～+85℃
Salt spray test time	96H
Airtight	IP67

Materials

Connector parts	Material	Plating
Center contact	bronze	Ag
Outer contact	brass	CuSnZn
Dielectric	PTFE	
seal ring	Red silicone rubber	
Contact point	bronze	Ag

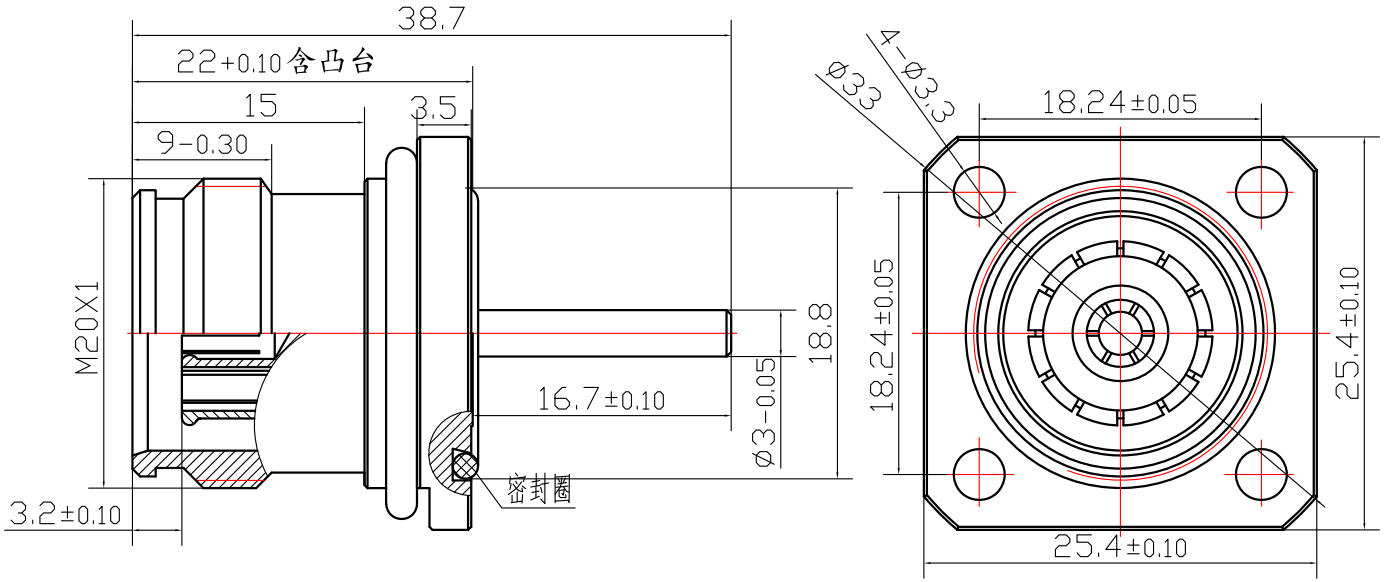

CAD GENERATED DRAWING,
DO NOT MANUALLY UPDATE

Any statements in this article shall not be interpreted as suggesting infringement of existing patents. Individual values may vary depending on factors including but not limited to application, design, cable type, assembly, and others workmanship

STANDARD TOLERANCES (Unless stated otherwise)

Geometric tolerances	Positional tolerance		
		X	.X
	0-6	±0.1	±0.05
	6-10	±0.1	±0.05
ANGLE ±1°	10-30	±0.15	±0.10
	>30	±0.15	±0.10
Scale:			

Product design	
Design	
Drawn	
Workmanship	
Checked	
Approvals	
As mension	

戴盛通信
DaShing Dashing Com-Tek Co., Ltd

TITLE: 4310-50KFD17-3

Drawing No.: DS3.650.2052

Company website: http://www.daisheng.net / Email: ds168@daisheng.net